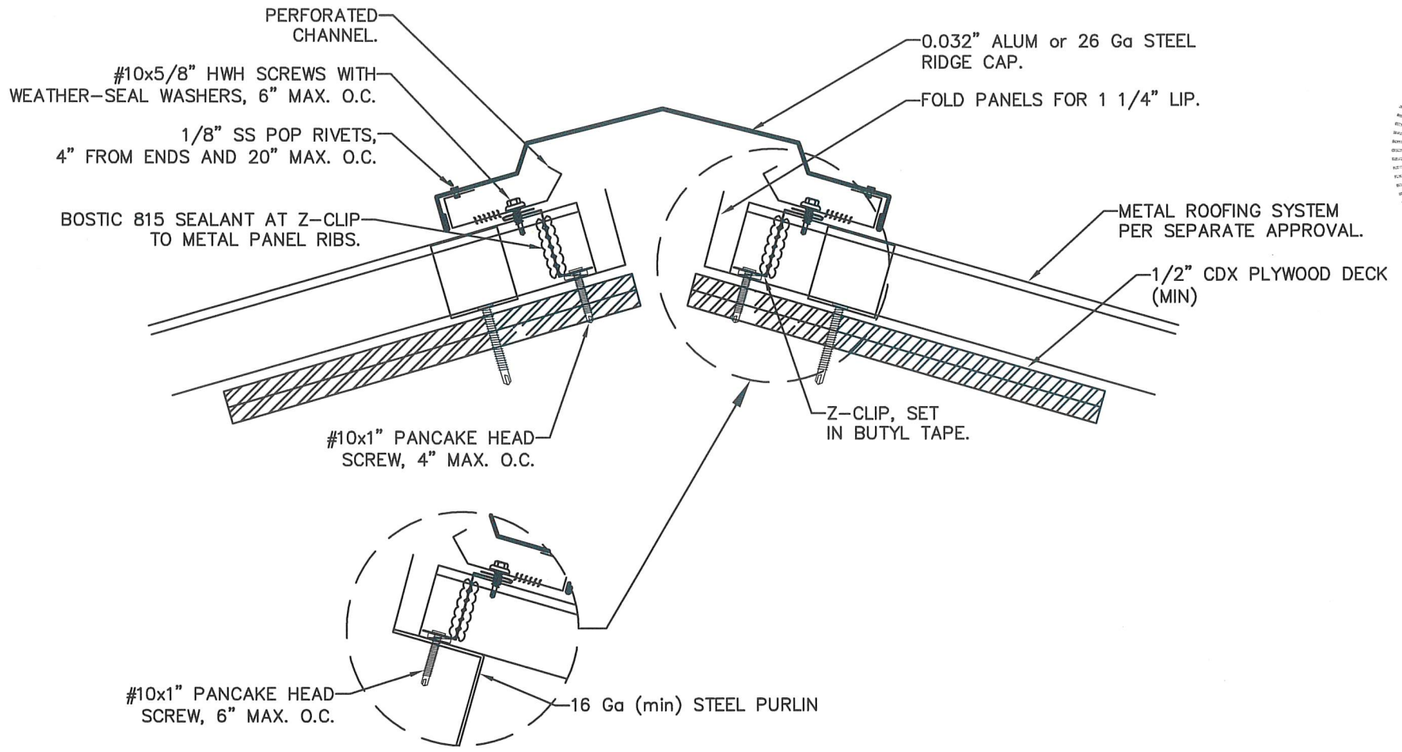
DYME METALS DM CLASS VENTED RIDGE CAP (LOW SLOPE)

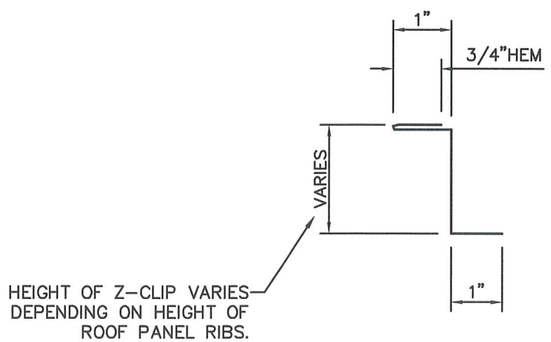
0.032" ALUMINUM or 26 Ga. GALVALUME, INSTALLED ON METAL ROOF PANELS OVER 1/2" PLYWOOD DECK OR 16 Ga. PURLINS (min).



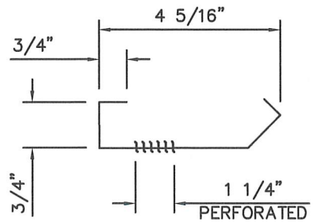
STRUCTURAL PANEL OPTION

GENERAL NOTES:

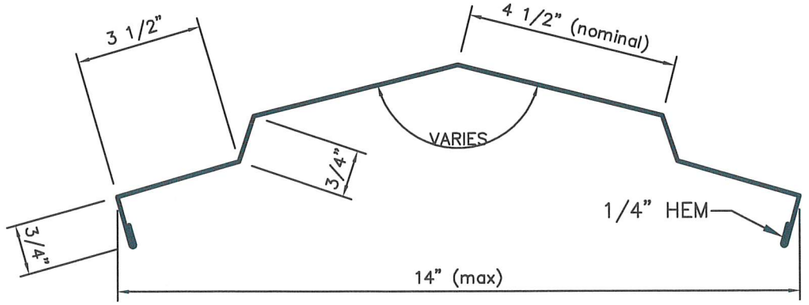
1. ALL SHAPES CAN BE MADE FROM 0.032" ALUM OR 26 Ga. STEEL
2. DYNAMIC VENTED RIDGE CAP MAY BE INSTALLED ON ROOFS UP TO 75 ft ABOVE GRADE (PER TAS 100(A), SECTION 11.1.1)
3. MIN ROOF SLOPE = 1/4" / 12".
4. THE METAL ROOF SYSTEM IS NOT PART OF THIS APPROVAL. SEE ROOF SYSTEM APPROVAL FOR MORE INFO.



Z-CLIP



PERFORATED CHANNEL



RIDGE CAP

Digitally signed by Scott Wolters
Date: 2025.09.08 04:28:00 -04'00'

| | | |